MINGZHU VALVE 明珠阀门

上海明珠阀门制造有限公司
SHANGHAI MINGZHU VALVE MFG.CO.,LTD.

阀门样本 >>>
VALVE STYLEBOOK

※ 其它阀类
OTHER VALVE

三千控制阀网
www.cv3000.com

一、产品简介 Brief introduction of product

1.1 圆顶阀是一气体输送固体物料的开关阀，起到开通和隔断管道空间的作用。它适用于通过松散的、干燥的、非粘性的、可流动的固体物料的密封输送系统，特别适用于火力电厂的灰渣处理系统。

1.2 圆顶阀的关断是由一个球形阀芯和一个充气的橡胶密封圈来实现的，而开与关又是在无压力状态下进行的，实现了两者无接触位移。

1.3 本阀门采用气、电联合控制，可实现安全可靠的远程控制。

1.1 As a switch valve, dome valve can connect and isolate the pipeline, which conveys solid material by air. It applies in airtight conveying system, which conveys loose, dry, non viscous, fluxible and solid materials, especially to clinker treatment system in heat engine plant.

1.2 The switch off of the dome valve is realised by a ball valve core and a gas-filled rubber sealing ring, both of which are free of touch displacement because of switching on/off in the state of zero pressure.

1.3 The valve adopts pneumatic and electric linkage control, realising safe and reliable remote control.

二、提要 Hints

2.1 在运行圆顶阀前，运行操作人员应认真阅读本说明书，熟知操作要领，严格遵守安全操作规程，符合使用要求，确保安全。
2.2 只有满足设计工况、符合设计技术参数的情况下才能应用本阀门。
2.3 只有使用本公司认可的备件，才能确保圆顶阀的运行安全。
2.4 运行操作人员应培训合格，具备上岗资格方可上岗，吊运、安装、调试和维修人员应具备相应的专业技术资质方可作业。
2.5 压缩空气未排放前，严禁开启圆顶阀。
2.6 严禁水和湿料进入阀内。
2.7 违反上述要求而引起的事故，本公司概不负责。

2.1 Before operating the dome valve, the operation personnel shall read this instruction carefully to familiar with the operating gist, strictly abiding the safety operating rules, using exactly according to the requirement so as to secure safety.
2.2 Do not use the valve until design working conditions and technical parameters are satisfied.
2.3 Only use approved spare parts by our company can ensure safe operation of dome valve.
2.4 Only qualified and trained operator may operate the product during hoist, installation, debugging and maintenance personnel shall possess relative professional skill.
2.5 No opening dome valve before relieving compressed air.
2.6 No water or wetted material is allowed to enter into the valve.
2.7 The company declines all responsibility for the accidents due to breach of above-mentioned requirements.

工控制阀网 www.cv3000.com

三、安全要求 Safety requirements

3.1 圆顶阀应在符合设计技术参数的正常工况下使用。
3.2 圆顶阀应由熟知操作规程、培训合格的人员操作。
3.3 不得擅自更改系统设计和操作程序。
3.4 任何违章操作都可能引发事故，应立即停止和纠正。
3.5 只有在确认机械装置、电气装置、气动装置和工作环境都正常的情况下，方可启动圆顶阀。
3.6 在启动、运行和停机的过程中，要观察各类仪表的示值是否正常。
3.7 定期巡查圆顶阀的工作情况，对异常工况应及时、正确的处理与排除。
3.8 在吊运、安装、操作、调试和维修时，应同时满足其他各相关的安全操作规程。

3.1 The dome valve shall work under normal working conditions in conformity with designed technical parameters.
3.2 Only qualified operator who well knew the operation procedure is allowed to operate the dome valve.
3.3 No alternating system design or operation procedure without prior permission.
3.4 Any error operation may cause accident, if so, stop immediately and shoot the trouble timely.
3.5 Do not start dome valve until mechanical, electrical and pneumatic mechanisms and operational environment are in order.
3.6 Observe whether the indicating value of each instrument is in order during start, operation and stop.
3.7 Regularly check the operational conditions of dome valve and shoot the trouble if any abnormal condition occurs.
3.8 Other relative safe operation regulations shall also be satisfied during hoist, installation, operation, debugging and maintenance.

四、结构简介-见图(1) Introduction to structure: see Fig. 1

4.1 阀芯(1.15)(关闭元件)安装在二个转轴(1.6、1.16)上，用销(1.14)固定；二转轴装在轴套(1.2)上，轴上装有O形密封圈(1.8)；轴套用螺栓固定在阀体(1.1)上，轴套与阀体间装有O形密封圈(1.9)。

4.2 橡胶密封圈(1.11.4)用固定圈(1.11.3)和压紧圈(1.11.2)固定在顶座体(1.11.1)上，组成顶座组件(1.11)；顶座组件用螺栓固定在阀座(1.1)上，顶座组件与阀体间装有O形密封圈(1.10)。

4.3 执行器(4.0)装在接套(1.7)上，接套连同轴套(1.2)用螺栓与阀体(1.1)相联；执行器通过轴一(1.6)带动阀芯(1.15)旋转，使阀门分别处于开与关。

4.4 控制箱(3.0)安装在执行器(4.0)上，箱内装有气、电执行元件。

4.1 Valve core (1.15) (closing component) is fitted on two rotating shafts (1.6 and 1.16) and fixed with pin (1.14); two rotating shafts are mounted on the shaft sleeve (1.2) with O ring (1.8); shaft sleeve is bolted to valve body (1.1) with O ring (1.9).

4.2 Rubber sealing ring (1.11.4) is fitted to footstock (1.11.1) with both retainer ring (1.11.3) and tightening ring (1.11.2), forming footstock assembly (1.11); footstock assembly is bolted to valve body (1.1) with O ring (1.10).

4.3 Actuator (4.0) is fitted to adaptor bush (1.7), with which, the shaft sleeve (1.2) is bolted with valve body (1.1); actuator drives valve core (1.15) to rotate via shaft 1 (1.6), making the valve open and close separately.

4.4 Control box (3.0) with pneumatic and electric actuator components inside is fitted to actuator (4.0).

1.1 阀体 Valve body
1.2 轴套 Axes sleeving
1.6 转轴(一) Spindle I
1.7 接套 Adaptor
1.8 O形密封圈(一) O seal ring I
1.9 O形密封圈(二) O seal ring II
1.10 O形密封圈(三) O seal ring III
1.11.1 顶座体 Footstock
1.11.2 压紧圈 Tightening ring
1.11.3 固定圈 Fixed ring
1.11.4 橡胶密封圈 Rubber sealing ring
1.11.6 管接头 Joint coupling
1.14 销 Pin
1.15 阀芯 Valve core
1.16 转轴(二) Spindle II
3.0 控制箱 Control box
4.0 执行器 Executor

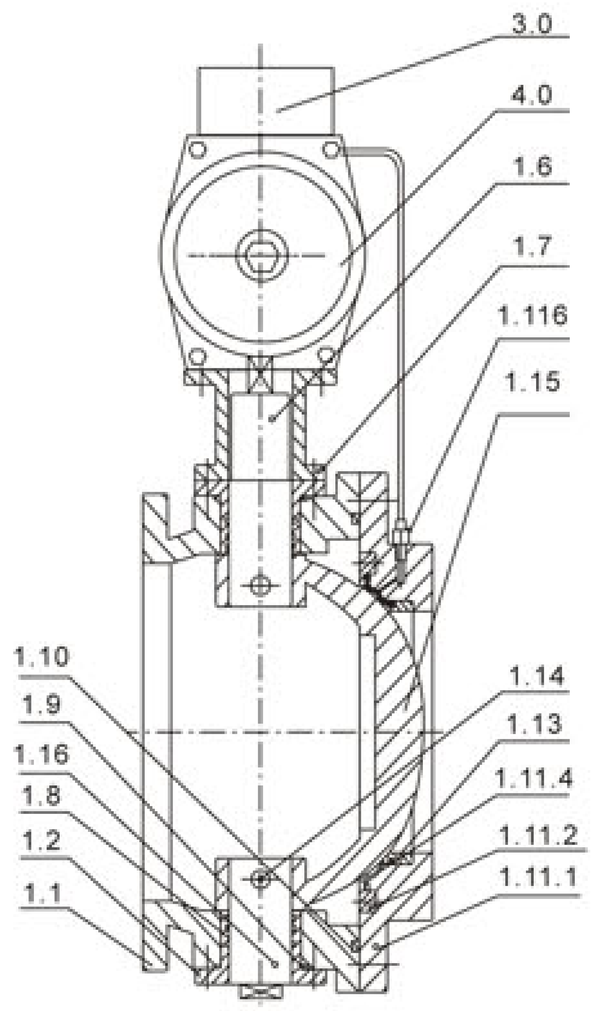

图(1) Fig.(1)

五、技术参数 Technical parameter

三千控制阀网 www.cv3000.com

序号No.	项目Item	单位Unit	YDF200	YDF250
4.1	DN	mm	200	250
4.2	系统工作压力 Operating pressure of system	MPa	0.35	
4.3	(工作点)供气压力：Air supply pressure of working point			
4.3.1	最低压力 Min. pressure	MPa	0.5	
4.3.2	最高压力 Max. pressure	MPa	0.8	
4.4	压力开关的高点压力 High spot pressure of pressure switch	MPa	0.5	
4.5	气缸型号 Cylinder model		DA-160	
4.6	系统工作电压 Operating pressure of system	V	220VAC/24VDC	
4.7	环境温度Ambient temperature	℃	-20~55	
4.8	额定工作温度Rated operating temperature	℃	150	
4.9	带变径接管的进出口法兰面(安装)尺寸：(Installation) dimensions of in/outlet flange face with reduced adaptor			
4.9.1	DN	mm	200	250
4.9.2	外径 Outside diameter	mm	340	395
4.9.3	联接螺孔中心直径 Diameter connecting with bolt hole centre	mm	295	350
4.9.4.1	螺栓数量与规格(n-d×L)：进口 Quantity and specification of bolts (n-d×L): inlet		8-M20×60	12-M20×65
4.9.4.2	螺栓数量与规格(n-d×L)：出口 Quantity and specification of bolts (n-d×L): outlet		8-M20×85	12-M20×85
4.9.5	进出口法兰面之间距离(H)Distance between in/outlet and flange faces (H)	mm	488	528
4.10	不带变径接管的进出口法兰面(安装)尺寸：Installation dimensions of in/outlet flange face without reduced adaptor			
4.10.1	进口法兰：(同4.9.1 4.9.4.1)Inlet flange			
4.10.2	出口法兰：Outlet flange			
4.10.2.1	DN	mm	300	350
4.10.2.2	外径 Outside diameter	mm	445	505
4.10.2.3	联接螺孔中心直径 Diameter connecting with bolt hole center	mm	400	460
4.10.2.4	螺栓数量与规格(n-d×L) quantity and specification of bolts (n-d×L)		12-M20×85	16-M20×85
4.10.3	进出口法兰面之间距离(H)Distance between in/outlet flange faces (H)	mm	305	325
4.11	外形尺寸(长×宽×高) External dimensions (L*W*H)	mm	900×470×305	947×540×325
4.12	重量(不包拓变径接管) Weight (excluding reduced adaptor)	kg	168	231

六、气动控制系统 Pneumatic actuated control system

6.1 气动控制原理如图(2)。Pneumatic actuated control principle(Fig. 2)

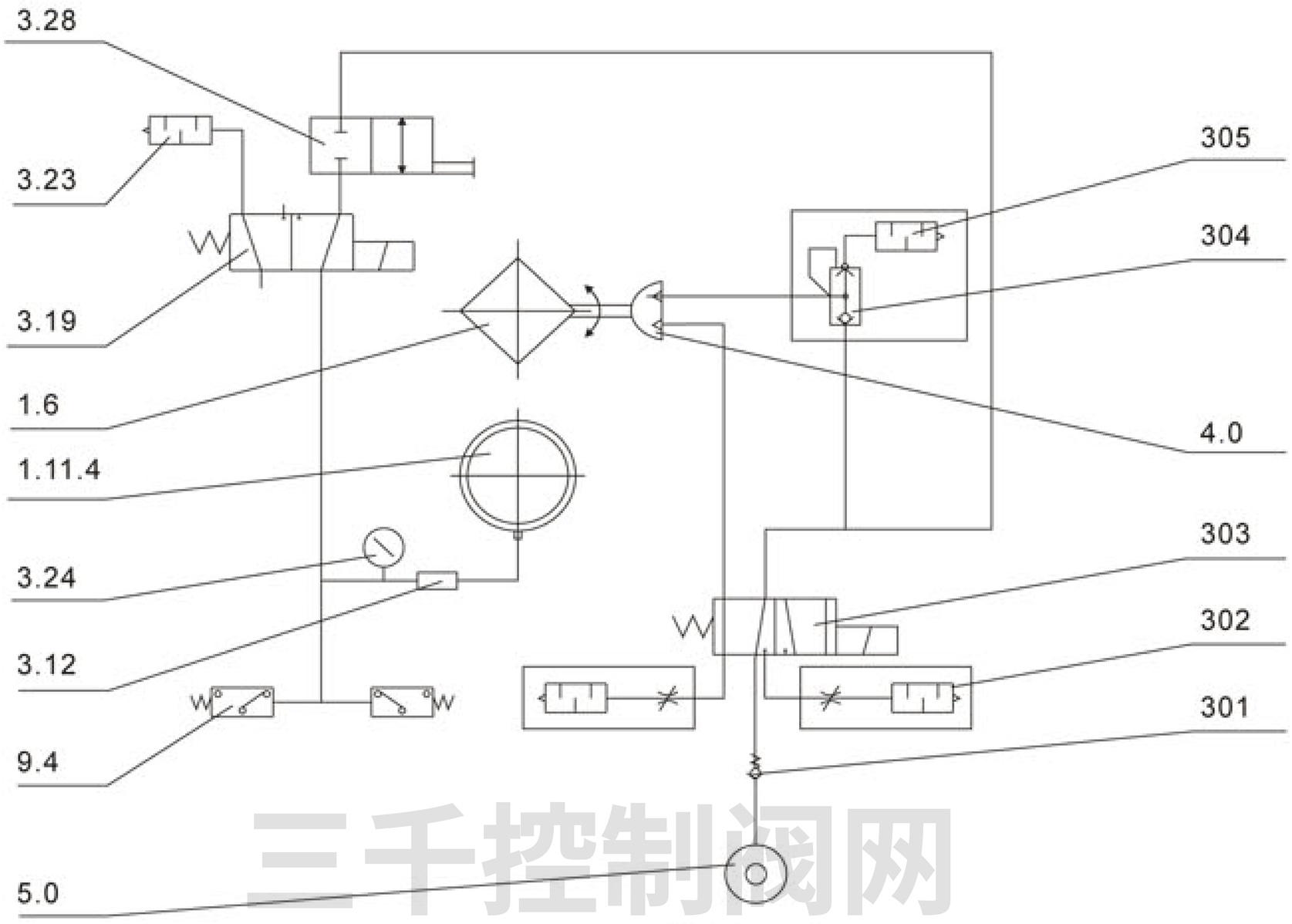

图(2) Fig.(2)

三千控制阀网
www.cv3000.com

气动元件汇总表：(表1) Peumatic components summary: (Form 1)

序号 No.	名称 Name	规格型号 Spec.	数量 Quantity	序号 No.	名称 Name	规格型号 Spec.	数量 Quantity
301	单向阀 Non-return valve ☆		1	3.28	机械式二位二通阀 Mechanical Type two position two-way valve	R-3-1/8"	1
302	排气消声节流阀 Exhausting silence throttle valve ☆		2	3.23	消声器 Muffler	BSL-01	1
303	二位五通电磁阀 Two position five-way solenoid valve ☆	PS140S/220V PS140S/24V	1*	3.19	二位三通电磁阀 Two position three-way solenoid valve	VT307-4G-01 VT307-5G-01	1*
304	快速排气阀 Fast exhaust air valve ☆		1	3.24	压力表 Pressure gauge	0-1.0MPa	1
305	消声器 Muffler ☆	BSL-02	1	3.12	过滤器 Filter	AF2000	1
9.41	压力开关 Pressure switch ☆	YSNS-106	1	1.6	转轴(一) Spindle I		
9.42	压力开关 Pressure switch ☆	YSNS-110	1	1.11.4	密封圈 Sealing ring		
5.0	压力空气源 Pressure air source ☆			4.0	气动执行器 Pneumatic actuator		

注：1.带“☆”的由用户自备，2.带“*”电压按用户需要选。Note: 1. ☆ marked items shall be self-provided by users.
2. pressures marked by"*"may select by user's requirement.

6.1.1 起始状态—关闭位置

当阀芯(1.15)处于关闭位置时，二位五通电磁阀(303)、二位三通电磁阀(3.19)均不通电，气源对密封圈(1.11.4)供气(关闭物料通道)，此时二位三通(3.28)的转臂被压住(为通)，压力表(3.24)显示出作用在密封圈(1.11.4)上的压力。

6.1.2 要打开物料通道时：

接通二位三通电磁阀(3.19)的电源，密封圈(1.11.4)内的气从二位三通电磁阀排出，气压降至设定的低点值后，压力开关(9.42)发出信号，并接通二位五通电磁阀(303)的电源，执行器(4.0)开始转位，气从快速排气阀(304)排出，当转至开启位置时，表明阀芯(1.15)已打开。

6.1.3 要关闭物料通道时：

关闭二位五通电磁阀(303)和时间继电器(9.5)的电源，执行器(4.0)反向旋转，气从二位五通电磁阀(303)排出，当转至关闭位置时[阀芯(1.15)阻断物料通道]，同时压住二位二通阀(3.28)，此时二位三通电磁阀(3.19)(通过时间继电器延时3秒后)断开电源，对密封圈(1.11.4)供气(关闭物料通道)。密封圈的压力是由压力开关(9.41)来监控的，当压力达到设定的高点值时，压力开关就发出信号，指示阀门已关闭。

6.2 气动控制的气压至少要比管道的工作压力高0.15MPa,

例如：输送管道的工作压力设为：0.35MPa

压力开关的高点压力设为：0.50Mpa

控制气路的最低压力应为：0.50MPa

6.3 压力源的空气必须是清洁的。

6.1.1 Start state–close position

When the valve core (1.15) is in close position, both 2–position 5–way solenoid valve (303) and 2–position 3–way solenoid valve (3.19) are disconnected with power supply, air source supplies air to sealing ring (1.11.4) to close material passage. In this case, the rocker arm of 2–position 3–way (3.28) is pressed (ON), and the pressure of sealing ring (1.11.4) will be shown on the pressure gauge (3.24).

6.1.2. To open material passage:

Connect 2–position 3–way solenoid valve (3.19) to power supply, the air inside sealing ring (1.11.4) will discharge from 2–position 3–way solenoid valve. When air pressure falls to the setting low point value, the pressure switch (9.42) will send out the signal, and connect 2–position 5–way solenoid valve (303) with power, actuator (4.0) starts rotate, and the air will discharge from fast exhaust valve (304), when turn to open position, it means valve core (1.15) is open.

6.1.3 To close material passage,

Disconnect 2–position 5–way solenoid valve (303) and time relay (9.5) with power supply, the actuator (4.0) will rotate in an opposite direction and the air will discharge from 2–position 5–way solenoid valve (303). When it turns to close position, valve core (1.15) will shut off the material passage and press 2–position 2–way solenoid valve (3.28) at the same time. At this time, 2–position 3–way solenoid valve (3.19) will disconnect power supply and supply the air to sealing ring (1.11.4) after 3 seconds of time delay and close the material passage. The pressure of sealing ring is controlled by the pressure switch (9.41). When the pressure is up to the setting high spot value, the pressure switch will send out signal indicating the valve will close.

6.2 The air pressure of pneumatic control shall be 0.15 MPa higher than operating pressure of pipeline at least.

For example: operating pressure of transmission pipeline: 0.35 MPa

High spot pressure of pressure switch: 0.50 Mpa

Min. pressure of control air passage: 0.50 MPa

6.3 The air of pressure source shall be clean.

二手控制阀网
www.cv3000.com

七、电气控制系统 VII. Electric control system

7.1 电气系统概述(原理见图3) Introduction to electric system (referring to figure 3 for the principle)

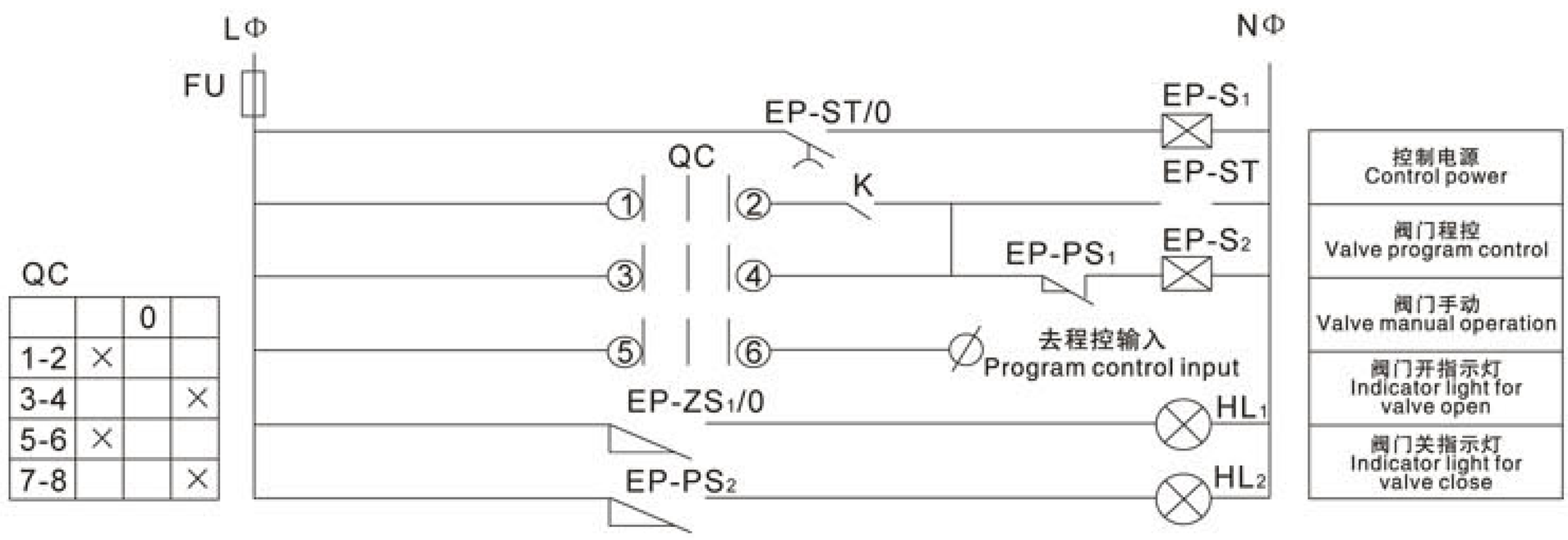

QC		0	
1-2	×		
3-4			×
5-6	×		
7-8			×

(图3) Fig.3

电气系统是由行程开关、压力开关及其它电气元件组成。用来控制电磁气阀的自动开启与关闭和显示阀的工作状态，可供现场控制和远距离集中控制，并对阀门实施保护。

The electric system is composed of travel switch, pressure switch and other electric components. It can control the automatic open and close of electromagnetic gas valve, and indicate the working state of valve. It not only supplies both local and remote integrated controls but also protects the valve.

7.2 电气操作说明

7.2.1 阀门开启时：接通电源，二位三通电磁阀EP-S1(3.19)工作，密封圈放气；当压力达到设定的低点值时，压力开关EP-PS1(9.41)接通，同时二位五通电磁阀EP-S2(303)工作，旋转气缸旋转，打开阀门，行程开关EP-ZS1/0(3.17)通过凸轮机构闭合，指示灯HL1(9.61)亮，显示阀门已打开。

7.2.2 阀门闭合时：断开电源，二位五通EP-S2(303)和时间继电器(9.5)开始工作，旋转气缸旋转，当旋转气缸达到关闭位置时，通过凸轮机构使机械式二位二通工作，此时二位三通EP-S1（3.19）(通过时间继电器延时3秒后)复位，密封圈充气，当压力达到设定的高点值时，压力开关EP-PS2(9.42)接通，指示HL2(9.62)灯亮，显示阀门已关闭。

7.3 主要电器元件规格：(表2)

7.2 Operating instruction

7.2.1 When the valve is open:

Connect with power supply, 2-position 3-way solenoid valve EP-S1(3.19) will work, and sealing ring will discharge air; when the pressure is up to the setting low spot value, the pressure switch EP-PS1 (9.41) will switch on, at the same time, 2-position 5-way solenoid valve EP-S2(303) and rotation cylinder will work; open the valve, travel switch EP-ZS1/0(3.17) will close via cam mechanism, the indicator light HL1(9.61) will turn on, indicating the valve is open.

7.2.2 When the valve is close:

Disconnect with power supply, both 2-position 5-way EP-S2(303) and time relay (9.5) start work and rotation cylinder works; when rotation cylinder moves to close position, mechanical 2-position 2-way will work via cam mechanism, at this time, 2-position 3-way EP-S1（3.19）will return to original position after 3 seconds of time delay and sealing ring will inflate; when the pressure reaches the setting high spot value, the pressure switch EP-PS2(9.42) will switch on and indicator light HL2(9.62) will turn on, indicating the valve is close.

序号No.	代号Code	名称 Name	型号 Model	数量 Quantity	序号No.	代号Code	名称 Name	型号 Model	数量 Quantity
9.1	FU	熔断器 Fuse	RT18/2A	1	9.61	HL_1	指示灯 Indicator light	ELRP/△	2
9.2	QC	三位旋钮 Three position knob	LB-D_2B40	1	9.62	HL_2	指示灯 Indicator light	ELGP/△	
9.3	K	中间继电器 Auxiliary relay	MY_2J/△	1	3.17	EP-ZS_1/0	行程开关 Travel switch	LXK_3-20S/L	1*
9.41	EP-PS_1	压力开关 Pressure switch	YSNS-106	2	3.19	EP-S_1	二位三通电磁阀 Two position three-way solenoid valve△	VT30T-$\frac{4G}{5G}$-01	1*
9.42	EP-PS_2	压力开关 Pressure switch	YSNS-110		303	EP-S_2	二位五通电磁阀 Two position five-way solenoid valve	PS140S/△	1
9.5	EP-ST	时间继电器 Time relay	ST3PF/△/5S	1					

注：1.带“*”已装在本阀门上，其余用户自理；2.带“△”的电压分别为220VAC(二位三通是4G)或24VDC(二位三通是5G)，按用户需要选。
Note: 1. "*" marked items have been installed in this valve; for the rest please users deal at disposal.
2. pressure of △ marked items is 220VAc (4G for two position three-way type) or 24VDc (5G for two position three-way type)

三电控制网 www.cv3000.com

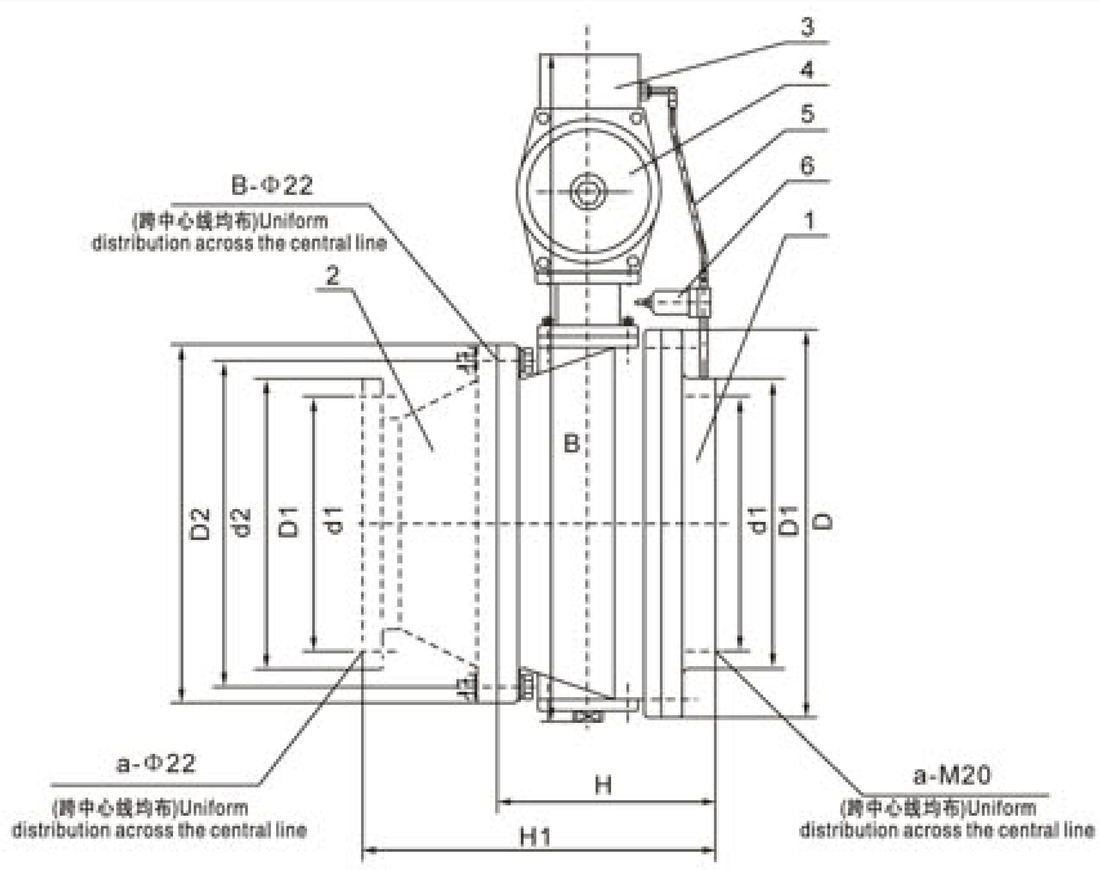

说明：

件2不属产品范围内的零部件，是我公司为用户方便而专门设计的，按用户订货生产。

Remark:

Component 2 does not belong to spare parts in production category, but only a specially designed component for users' convenience. Producing will depend on users' ordering.

序号 No.	代号 Code	名称 Name	数量 Quantity	序号No.	代号Code	名称 Name	数量 Quantity
1	Y-100	阀体总成 Body assemby	1	4	Y-400	执行器 Actuator	1
2	Y-202	变径接管 Reduced adaptor	1	5	Y-501	气管 Air tube	1
3	Y-300	控制箱 Control case	1	6	AC2000	过滤器 Filter	1

型号 Model	D	D_1	d_1	D_2	d_2	B	H	H_1	a	b
YDF200	470	340	295	445	400	900	305	488	8	12
YDF250	540	395	350	505	460	946	325	528	12	16

自由浮球式疏水阀
FREE-BALL FLOAT STEAM TRAP

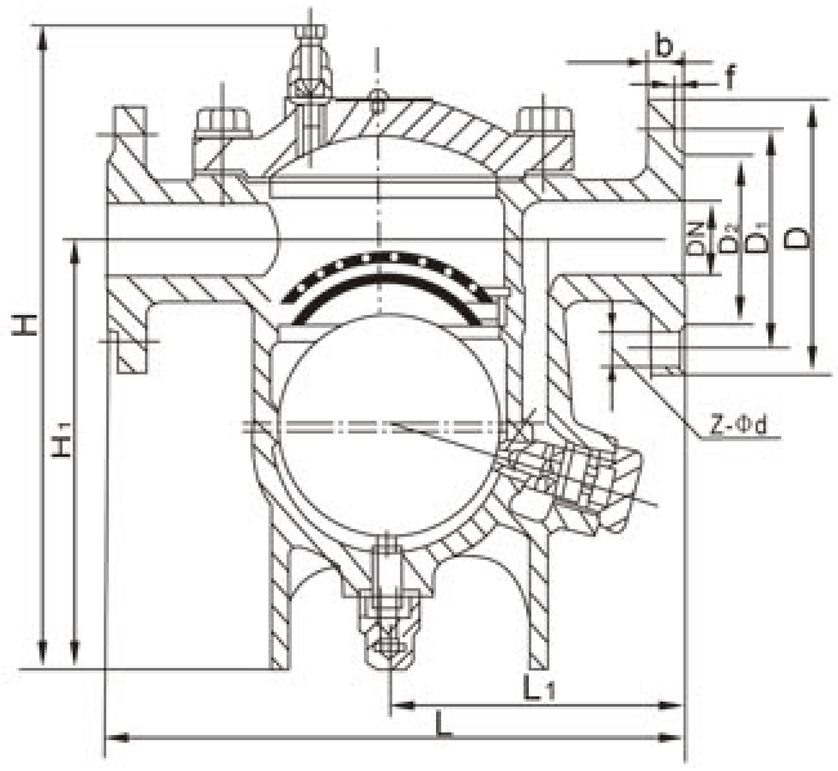

主要性能规范：Main property and specification

型号 Model	公称压力 Nominal pressure PN(MPa)	壳体试验压力 Shell test pressure ps(MPa)	最高工作压力 Max working pressure PMO(MPa)	最高工作温度 Max working temperature TMO(℃)	最高允许温度 Max allowable temperature TMA(℃)	漏气率 leakage rate(%)	最高背压率 Max rate of back pressure(%)	适用介质 Applicable medium
CS41H-16 S41H-16 CS41H-16C S41H-16C	1.6	2.4	1.6	203	220 425	<0.5 <0.5	>80 >80	蒸汽、凝结水 Steam,condensed water 蒸汽、凝结水 Steam,condensed water
CS41H-40 S41H-40	4.0	6.0	4.0	250	425	<0.5	>80	蒸汽、凝结水 Steam,condensed water

三千控制阀网 www.cv3000.com

主要零件材料：Materials for main parts

零件名称 Part name	阀体、阀盖 Body, bonnet	阀座、球、过滤网 Seat,ball,percolator
CS41H-16. S41H-16	灰铸铁 Gray cast iron	不锈钢 Stainless steel
CS41H-16C. S41H-16C CS41H-40. S41H-40	碳素铸钢 Carbon casting steel	不锈钢 Stainless steel

主要连接及外形尺寸 Main connection and external dimensions(mm)

型号 Model	公称通径DN(mm) Nominal diameter	尺寸 Dimension(mm)								重量(kg) Weight
		L	D	D_1	D_2	D_6	b	z-Φd	H	
CS41H-16C	15	210/230	95	65	45	-	14	4-Φ14	175	10.6
	20	210/230	105	75	55	-	14	4-Φ14	180	11.2
	25	230	115	85	65	-	14	4-Φ14	181	11.5
	32	320	135	100	78	-	16	4-Φ18	265	28.7
	40	320	145	110	85	-	16	4-Φ18	270	31
	50	320	160	125	100	-	16	4-Φ18	274	32
	65	410	180	145	120	-	18	4-Φ18	442	70
	80	430	195	160	135	-	20	8-Φ18	452	-
	100	550	215	180	155	-	20	8-Φ18	460	-
CS41H-40	15	210	95	65	45	40	16	4-Φ14	-	-
	20	2310	105	75	55	51	16	4-Φ14	-	-
	25	230	115	85	65	58	16	4-Φ14	-	-
	32	320	135	100	78	66	18	4-Φ18	-	-
	40	320	145	110	85	76	18	4-Φ18	-	-
	50	320	160	125	100	88	20	4-Φ18	-	-

上海明珠阀门制造有限公司
SHANGHAI MINGZHU VALVE MFG.CO.,LTD.

厂址：上海市奉贤区金汇镇工业大道1111号
ADD:No.1111 Industry Road Jinhui Town, Fengxian County. Shanghai, China
电话(TEL)：021-57482386　57483788
传真(FAX)：021-57482872
邮编(P.C)：201404
网络实名：上海明珠阀门
http://www.mingzhu-valve.com
E-mail:mzfm6688@163.com

工控制阀网
www.cv3000.com

中国进出口商品检验总公司质量认证中心　中石化物资资源市场成员　中石油一级供应网络成员　国家电力　合同信用等级认证　中国人民保险产品责任保险　中国阀门协会成员

以上产品资料仅供参考，如有参数改动本公司恕不另行通知并不承担法律责任。